Real-Time SDR-Based Physical Intrusion Detection System Using GNU Radio And USRP B210

Shubham Gupta [24SP06001]
Himanshu Kumar [24SP06015]

24 April 2025

1. Introduction

Software Defined Radio (SDR) has transformed the way wireless communication and sensing systems are designed and deployed. This report presents the design and implementation of a real-time physical intrusion detection system (PIDS) using SDR hardware (USRP B210) and GNU Radio. The system functions similarly to a passive radar, relying on signal reflections caused by movement or intrusion in a monitored area.

2. System Overview

The proposed system operates by transmitting a known waveform using a USRP B210, receiving the reflected signal, and analyzing it for anomalies. It functions through the following pipeline:

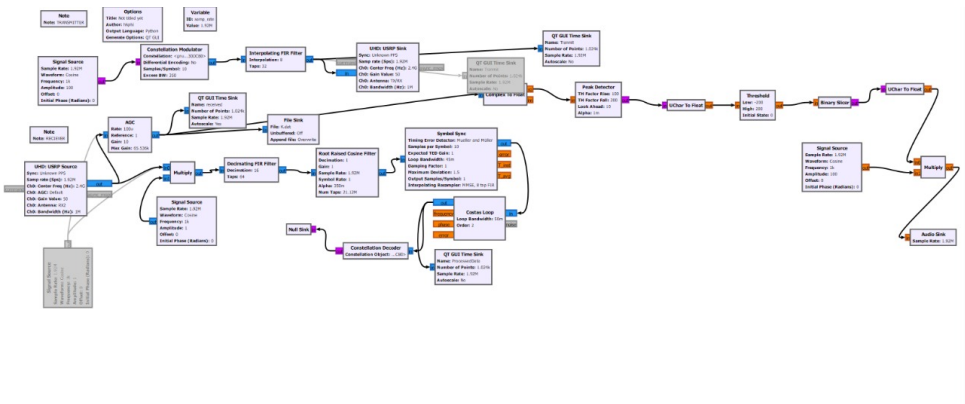

Figure 1: Overall GNU Radio Flowgraph

- Continuous waveform generation and QPSK modulation.
- Transmission using USRP B210.
- Reception of the reflected signal.
- Signal processing: AGC, filtering, demodulation, and detection.
- Motion detection using peak detection and thresholding.
- Audio alarm triggering.

3. Transmitter Design

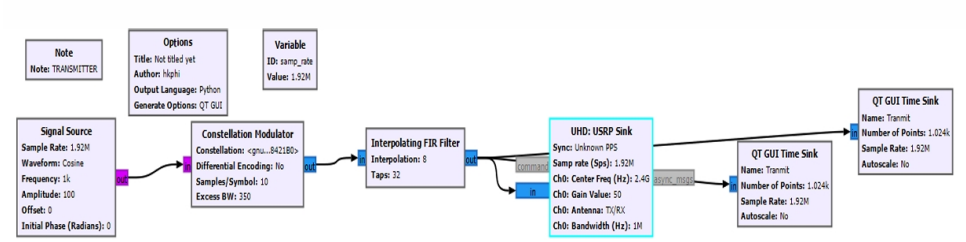

Figure 2: Transmitting Block

3.1. Signal Generation

A cosine wave of 1 kHz is generated with a sample rate of 1.92M. This baseband signal serves as the signature waveform.

3.2. Modulation

The signal is modulated using QPSK with no differential encoding and a sample-per-symbol (sps) value of 10. Excess bandwidth is set at 0.35.

3.3. Filtering and Transmission

An interpolating FIR filter upsamples the modulated signal (interpolation factor: 8). The output is transmitted using USRP Sink at a center frequency of 2.4 GHz.

4. Receiver Design

4.1. Signal Acquisition and Conditioning

The USRP Source block captures the reflected signal using the same frequency and sample rate. AGC ensures stable signal amplitude regardless of movement distance.

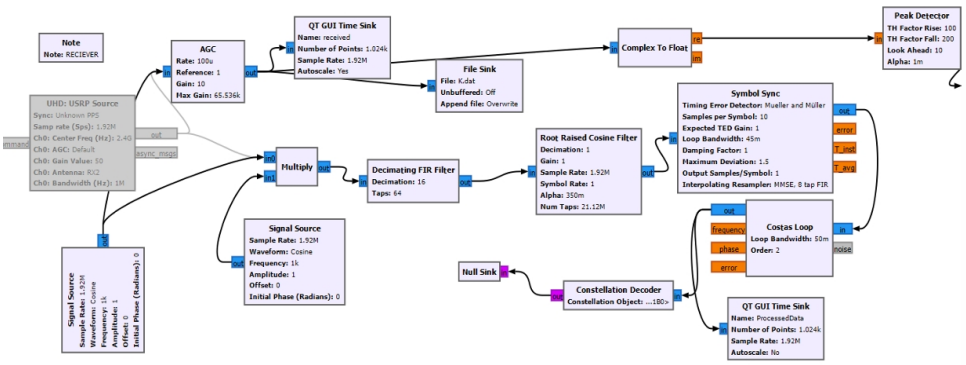

Figure 3: Receiving Block

4.2. Baseband Conversion and Filtering

The signal is mixed with a local oscillator (Multiply block), then filtered and downsampled using a Decimating FIR Filter (Decimation: 16, Taps: 64).

4.3. Demodulation

- **Root Raised Cosine Filter:** Reduces ISI.
- **Symbol Sync:** Recovers symbol timing using Mueller-Muller method.
- **Costas Loop:** Locks onto carrier phase.
- **Constellation Decoder:** Extracts bitstream.

4.4. Alarm Logic and Detection

- **Peak Detector:** Identifies motion-induced spikes.
- **Threshold Block:** Binarizes signal (e.g., TH high: 20, low: -20).
- **Binary Slicer:** Converts to binary (0 or 1).
- **Tone Generator and Multiply:** Mixes with intrusion signal.
- **Audio Sink:** Triggers real-time alarm tone.

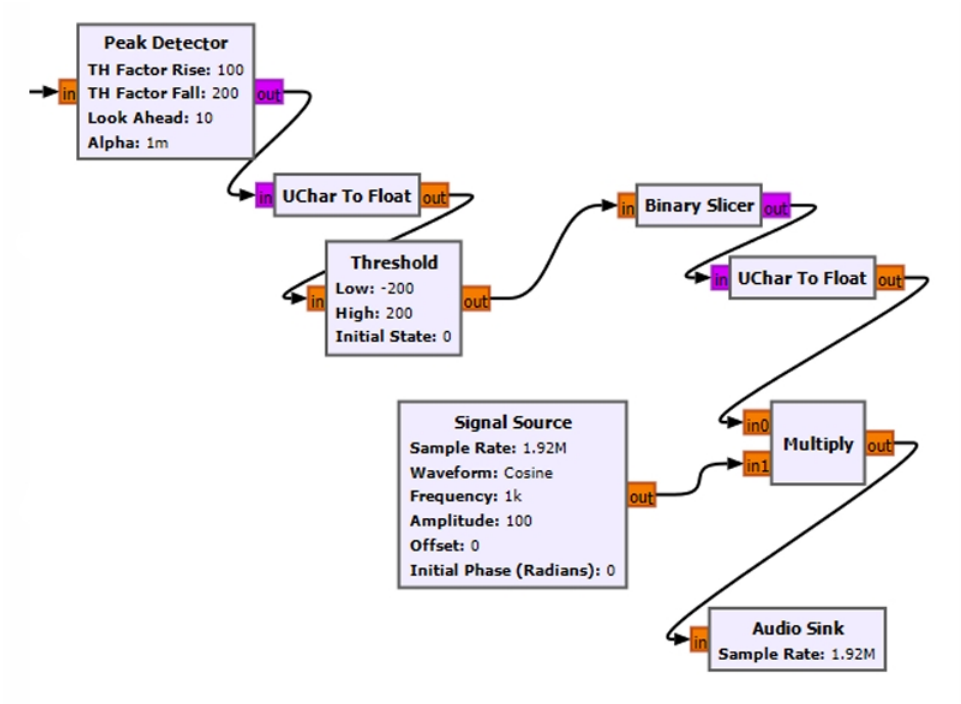

Figure 4: Alarm Block

5. Why USRP B210?

- Dual-channel SDR with MIMO capabilities.
- Operates in wide frequency range: 70 MHz to 6 GHz.
- Compatible with GNU Radio for prototyping.
- USB 3.0 support enables real-time data streaming.

6. Results

The system successfully identifies motion within the detection region. The reflected signal perturbation causes the peak detector to activate, which in turn crosses the set threshold, resulting in an audible alarm. Debugging via QT GUI Time Sink validates signal flow and detection logic.

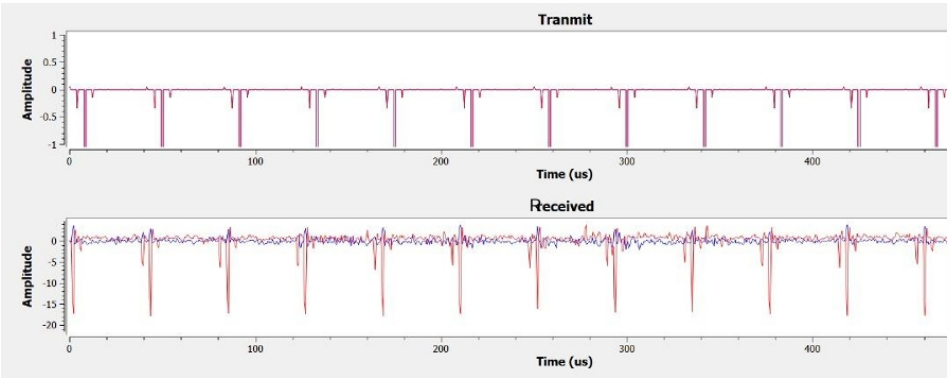

Figure 5: Without Interference

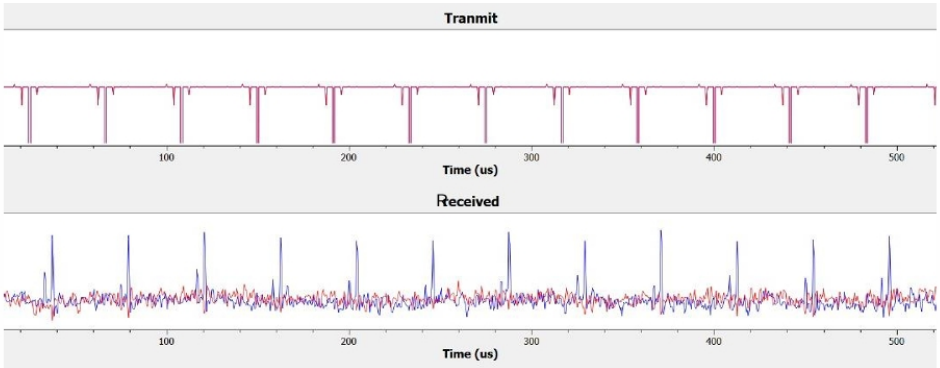

Figure 6: With Interference

7. Future Scope

7.1. Machine Learning Integration for Intelligent Intrusion Classification

- Apply supervised learning techniques (SVM, Random Forest, CNN) on the captured signal data to:
  - Differentiate between types of movements (human, animal, wind disturbances).
  - Reduce false alarms through smarter pattern recognition.
  - Build a predictive security system that adapts over time.

Smart Alert Systems

- Integrate with APIs or IoT modules to:
  - Send SMS/Email/Notifications to authorized users.
  - Trigger external devices such as lights, cameras, or smart locks.
  - Connect with home automation systems (like Alexa, Google Home).

Directional Antenna Deployment

- Employ beamforming or use directional antennas to:
  - Focus the detection area (specific hallway or entrance).
  - Reduce environmental noise and increase detection accuracy.
  - Enable spatial tracking or intrusion location estimation.

Multi-Node Intrusion Detection Network

- Expand the system into a multi-receiver or multi-transmitter setup:
  - Cover large areas such as industrial zones or borders.
  - Perform triangulation to locate the intruder precisely.
  - Improve redundancy and fault tolerance.

Remote Monitoring and Cloud Logging

- Enable remote access and data

8. Conclusion

The developed SDR-based intrusion detection system offers a flexible and scalable approach to motion detection in secured environments. Utilizing USRP hardware with GNU Radio allows rapid prototyping and real-time performance, making this approach viable for home, office, and industrial security applications.

References

[1] GNU Radio, *An Open-Source Toolkit for Software Radio.*

[2] Ettus Research, *USRP B210 Product Datasheet, USRP Hardware Driver and USRP Manual.* National Instruments.

[3] M. Skolnik, *Introduction to Radar Systems*, 3rd ed., McGraw-Hill, 2001. (For Doppler effect and signal reflections)

[4] A. G. Zaji, M. Bahadori, "A Simple and Efficient Peak Detection Algorithm for Real-Time Applications," *Journal of Signal and Information Processing*, Vol. 5 No. 2, 2014, pp. 111-117.